FLANGE

ALL NIPPLES TO BE 2-1/2"

FLOW SENSOR

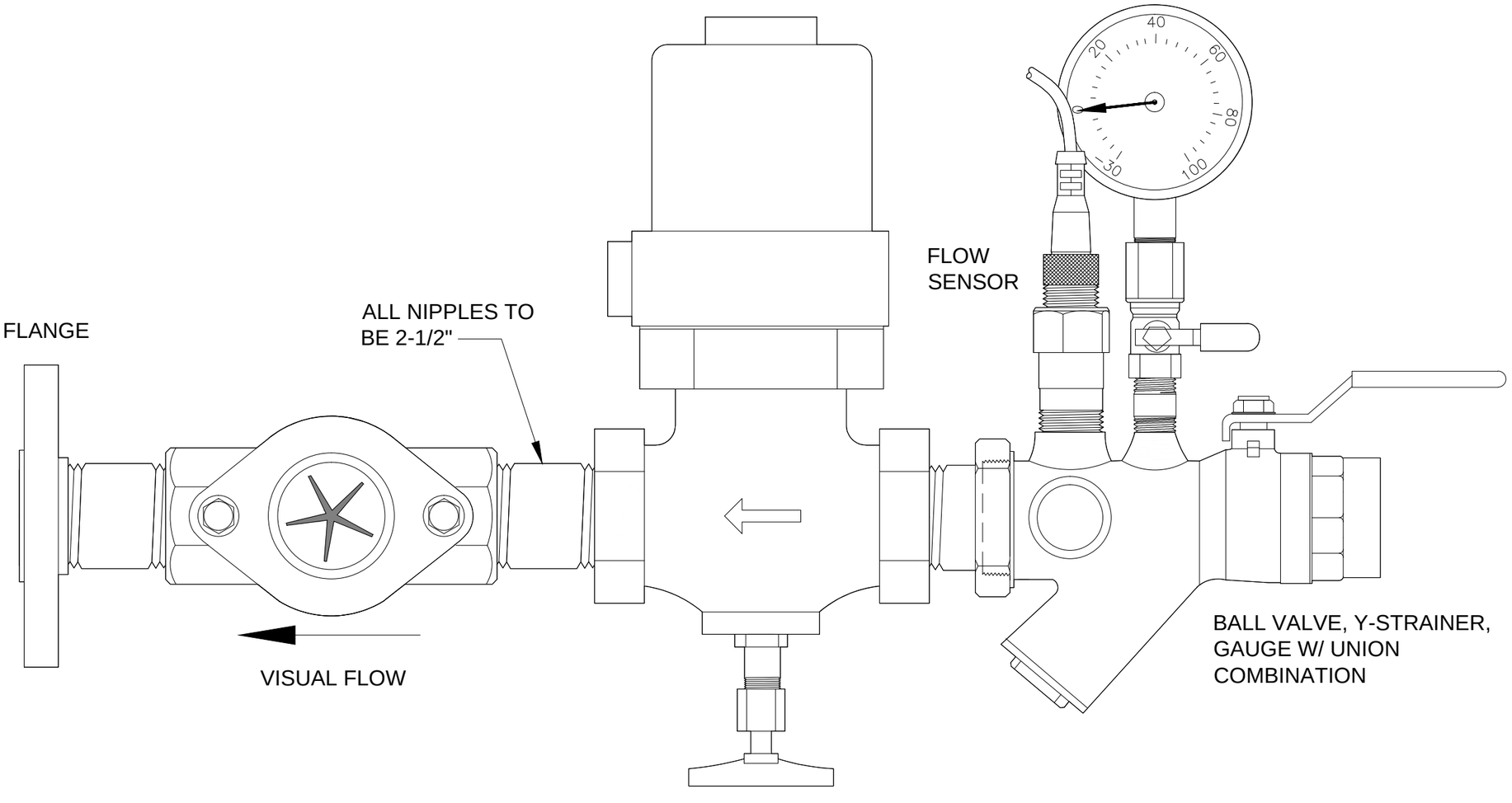

VISUAL FLOW

SOLENOID W/ EMERGENCY BYPASS VALVE

BALL VALVE, Y-STRAINER, GAUGE W/ UNION COMBINATION

CMFTS-MT-RP-CV-1IN

General Notes:

ALL PIPE AND VALVES TO BE 1".

VALVES ARE BRONZE AND NIPPLES ARE STAINLESS STEEL 304

Lakeside Petroleum

Clean Fuel ~ Clean Earth

LAKESIDE PETROLEUM SERVICE EQUIPMENT STANDARD

THIS DOCUMENT IS THE PROPERTY OF PETROPANELS.COM AND CORE ENGINEERED SOLUTIONS. DO NOT REPRODUCE, FURNISH TO OTHERS, OR USE FOR OTHER THAN PURPOSE INTENDED WITHOUT EXPRESS WRITTEN CONSENT OF PETROPANELS.COM AND CORE ENGINEERED SOLUTIONS, ALL WHOSE RIGHTS ARE HEREIN RESERVED.

Lakeside Petroleum Service LLC
Clean Fuel • Clean Earth
FUEL SYSTEMS & CONTROLS
PH: 315-403-9985
Joe@PetroPanels.com
www.PetroPanels.com
FUEL SYSTEMS & CONTROLS

Date: 01/19/17	Sheet #
Rev: 002	D01
Drawing:CMFTS-MT-RP-CV-1IN R002.dwg	

File Name : CMFTS-MT-RP-CV-1IN R002.dwg
Created Date : March 29, 2016
Plot Date : 1/19/2017 1:47:10 PM
Plot By : www.PetroPanels.com/ Mark Michnick
Paper size : ANSI B (11.00 x 17.00 Inches)
Plot Scale : 1" = .1484