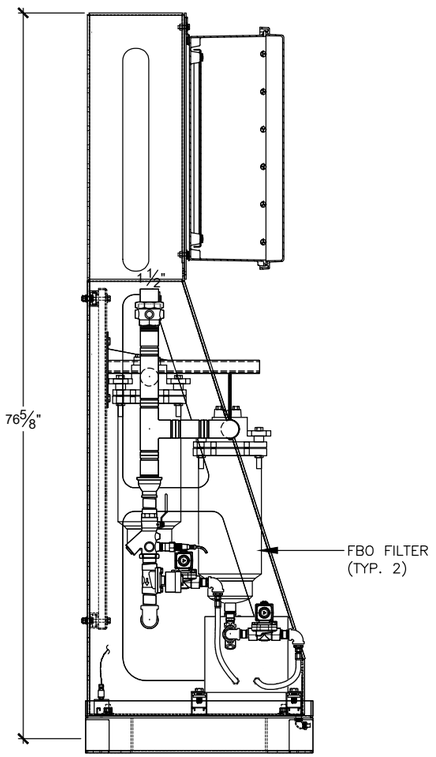

SIDE VIEW

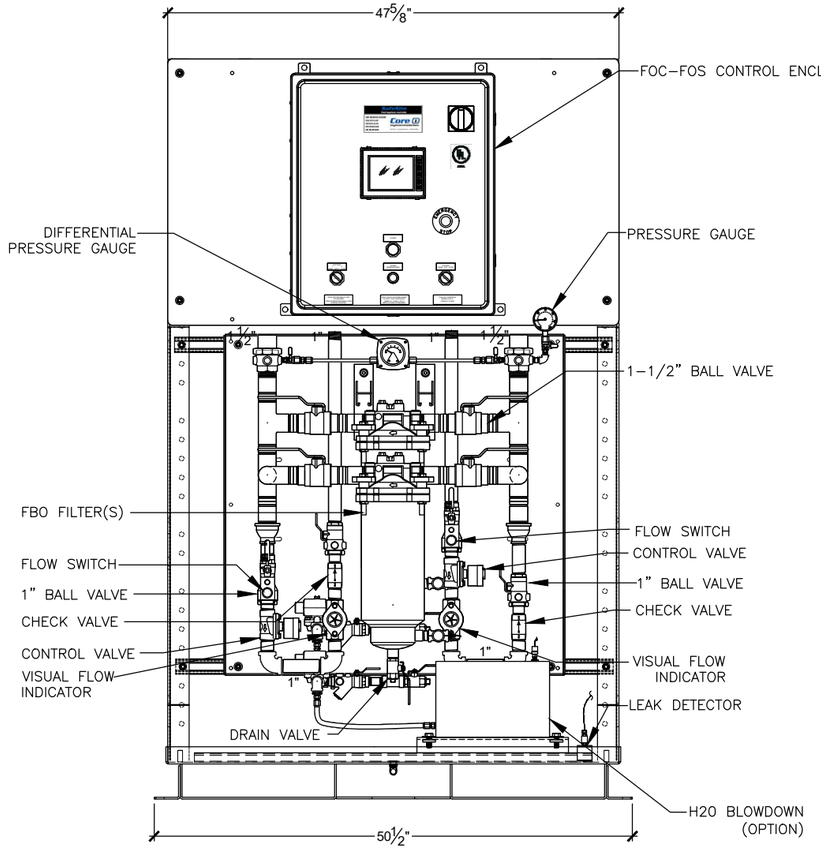

FRONT VIEW

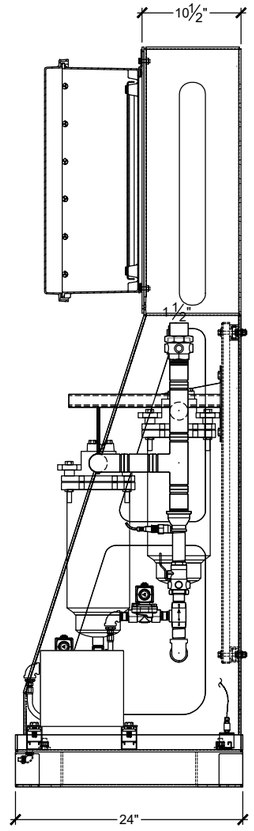

CARBON STEEL SKID – 24x48
WITH UPRIGHTS & CONTROL PANEL

CMFTS-FPS

General Notes:

THIS DOCUMENT IS THE PROPERTY OF PETROPANELS.COM AND CORE ENGINEERED SOLUTIONS. DO NOT REPRODUCE, FURNISH TO OTHERS, OR USE FOR OTHER THAN PURPOSE INTENDED WITHOUT EXPRESS WRITTEN CONSENT OF PETROPANELS.COM AND CORE ENGINEERED SOLUTIONS. ALL WHOSE RIGHTS ARE HEREIN RESERVED.

Lakeside Petroleum Service LLC
Clean Fuel • Clean Earth
FUEL SYSTEMS & CONTROLS
PH: 315-403-9985
Joe@PetroPanels.com
www.PetroPanels.com
FUEL SYSTEMS & CONTROLS

Date: 02/14/18	Sheet #
Rev: 005	D01
Drawing:CMFTS-FPS R005.dwg	

File Name : CMFTS-FPS R005.dwg
Created Date : March 29, 2016
Plot Date : 2/14/2018 10:08:01 AM
Plot By : www.PetroPanels.com/Mark Michnick
Paper size : ANSI B (11.00 x 17.00 Inches)
Plot Scale : 1" = .14845'