


*Servicing the Biofuels, Petroleum, and the Chemical Industries for Over 30 Years*

# GeoDry and PureFuels Operations Manual

## Equipment Description

*GeoDry*
GDHF-150NPT-25G-1M-1488 (PN: #3308)



- Diesel fuel coalescing filter for dispensing or polishing filtration applications up to 25 GPM.
- All-aluminum filter housing is fully compatible with diesel and biodiesel blends.
- Uses Proprietary GeoDry element technology which exceeds SAEJ1488 requirements.
- Element 5.0µ, removes down to <1.0µ.
- Standard with 1-1/2" NPT inlet and outlet, site glass and ¼" water drain.

- Replace only with GDF-25G-1M-SAEJ1488 (7645509) LPS#3402

*PureFuels*
PFHF-150NPT-100G-1M (PN: #3311)



- Diesel fuel particulate filter for dispensing or polishing filtration applications up to 100 GPM
- All-aluminum filter housing is fully compatible with diesel and biodiesel blends
- Uses Proprietary PureFuels element technology which exceed SAEJ1488 requirements
- Element 5.0µ, removes down to <1.0µ
- Standard with 1-1/2" NPT inlet and outlet.

- Replace only with PFF-100G-1M-SAEJ1488 (7645510) LPS#3631

6847 Ellicott Drive, Suite A, East Syracuse, NY 13257
Main 315-403-9985 ~ Fax 315-295-2613
www.LakesidePetroleum.com ~ Sales@PetrPanels.com

## Typical Installation

A typical installation incorporates an inlet and outlet ball valve for servicing the filtration system. The filtration system typically includes a particulate filter followed by a coalescing. Requires 4" of clearance below the housing to change the filter.

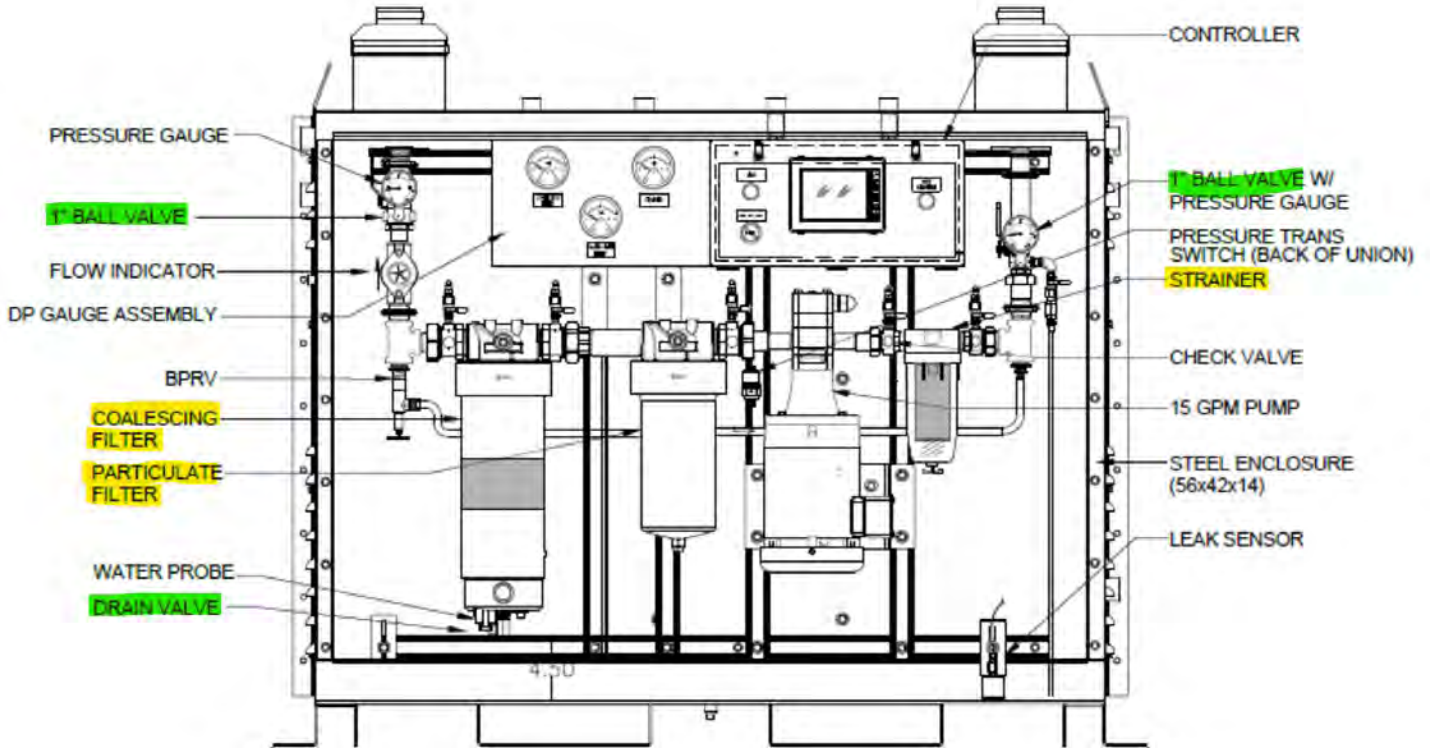


## The Replacement Cartridge

Verify the replacement filter cartridge is a GeoDry Coalescer or a PureFuels Particular cartridge. Only GeoDry or PureFuels cartridges will fit into the housings because the cartridge and the housings are "D" shaped.

## Changing the filters

1. Turn off the power to the filtration controller
2. Turn off all valves on the inlet and outlet sides of the filter housings.
3. Drain the drain the particulate and coalescing housing from their bottoms with the ¼" ball valve (if applicable) into an approved container. If there is a air bleed valve on for adjacent to the housings upon it up to allow the housing to drain quicker and fully. If the housing doesn't have a drain valve then verify there is no pressure on the housing before removing the filter cartages.
4. To remove the filter cartridge from the housing, use a strap wrench and turn the housing counter clockwise until the housing is loose enough to fining unscrewing it by hand. Remove the cartridge from the housing by pulling it out of the top.
5. Insert the new cartridge in the housing. Place the housing underneath the filter housing head. Lift the cartridge and push it into the housing head. Rotate the cartridge until if is all the way inserted. Lift the

housing and turn it clockwise into the housing head. Tighten the housing with a strap wrench until it's tight with the sight glass facing the front if the house has a sight glass.

6. Close the ¼" drain valve on the bottom of the housing.
7. Close any air bleeder valve that was opened.
8. Open the inlet and outlet ball valves.
9. Turn on the power to the controller and momentary turn the pump on and off while looking for leaks in the housing.
10. After you verified there are no leaks start a fuel pump and let if run for at least five minutes while verifying there are no leaks.

## Drawings

### GeoDry 25GPM Housing

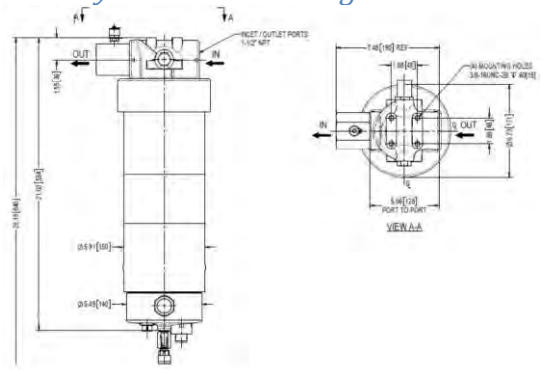

Filter Assembly #7645495
**GDHF-150NPT-25G-1M-SAEJ1488**
SAP #7645509
**Spare Element - GDF-25G-1M-SAEJ1488**

### PureFuels 70GPM Housing

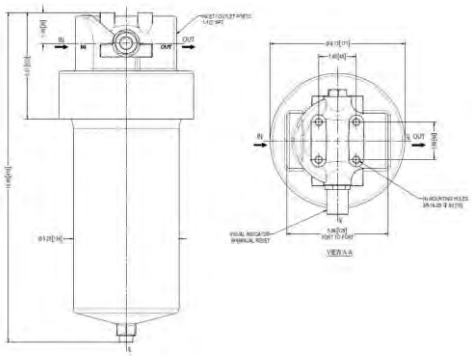

Filter Assembly #7645494
PFHF-150NPT-100G-1M
Spare Element #7645510
**PF-70G-1M**

### PureFuels 9" Housing

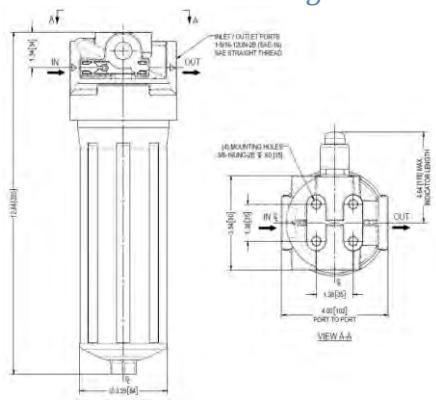

Particulate Filter Assembly #7645497
**PFHF-100NPT-9IN-35G-3M**
Spare Element #7645512
**PF-9IN-35G-3M**

### PureFuels 6" Housing

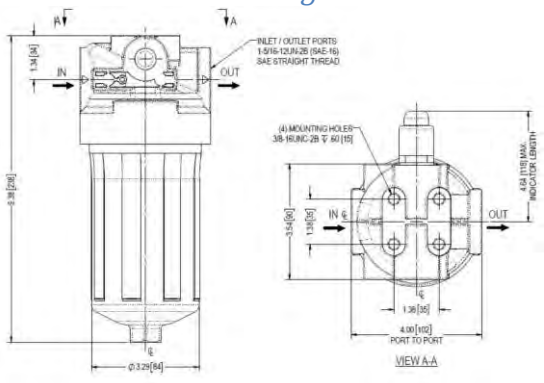

Filter Assembly #7645499
PFHF-MAN-100G-1M
Spare Element #7645511
**PF-6IN-35G-3M**