PC2-PFHF

PC2-PFHF-140G-1M-3PH-460

- Diesel fuel cart with bag housing pre-filter (for removal of microbial bloom contamination and rust), particulate filter, and high efficiency coalescing filter (for single-pass removal of emulsified and free water), and pump/motor combo 140 GPM (460v -3 Phase)
- Perfect for kidney loop polishing or single pass transfer of diesel fuel in larger storage tanks
- All-aluminum filter housing is fully compatible with diesel and biodiesel blends
- Uses Proprietary **GeoDry** and **PureFuel** element technology which exceed SAEJ1488 requirements

PureFuels
GeoDry

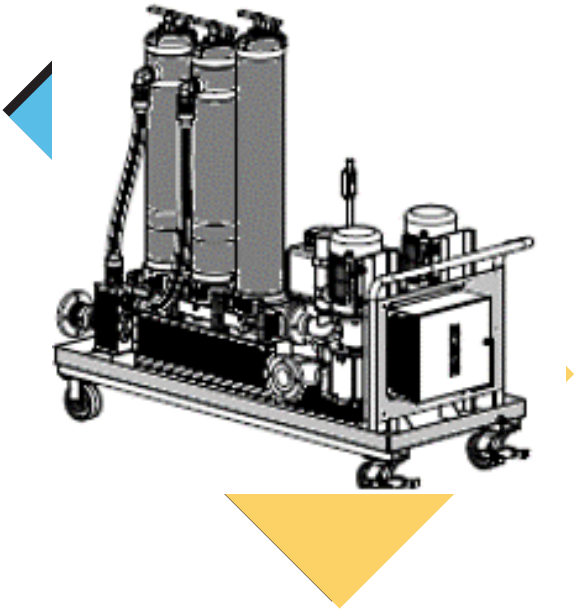

Bulk Diesel Cart ##7645506	
Flow Rating:	140 gpm
Temp. Range:	32º to 150ºF (No Heater)
Bypass Indication PFHF:	15 psi
GDHF Bypass Indication/ Cracking:	25 psi/30 psi
PFHF Bypass Indication/ Cracking:	15 psi/20 psi
Porting Base:	Anodized Aluminum
GDHF & PFHF:	Aluminum w/ Epoxy Paint Electroless Nickel Plating
PFHF Element Change Clearance:	36” Min.
GDHF Element Change Clearance:	34” Min.
Full Load Motor Amps:	13.0 A @ 460V (2x 6.5A – 5 HP Motors)
Motor Voltage (Frequency):	460 VAC (60 Hz) - 3 Phase
Service Factor Amp:	1.15 SF at 40° C (104° F) / 1.0 SF at 65° C (149° F)

PureFuels Spare Elements #7645513
PF-70G-3M
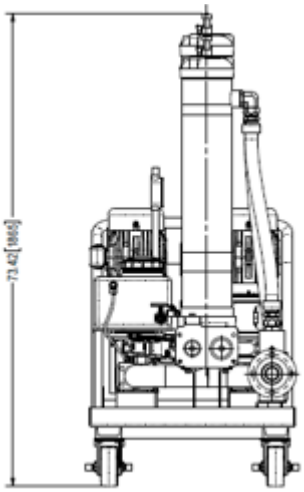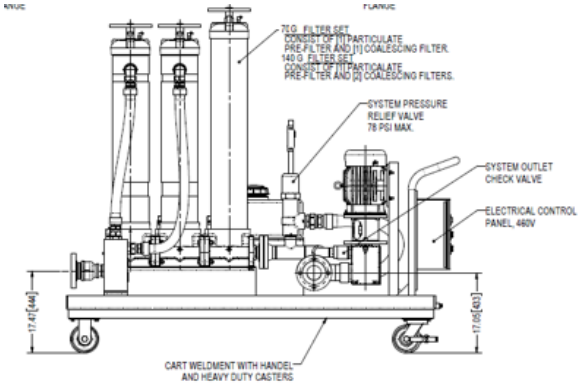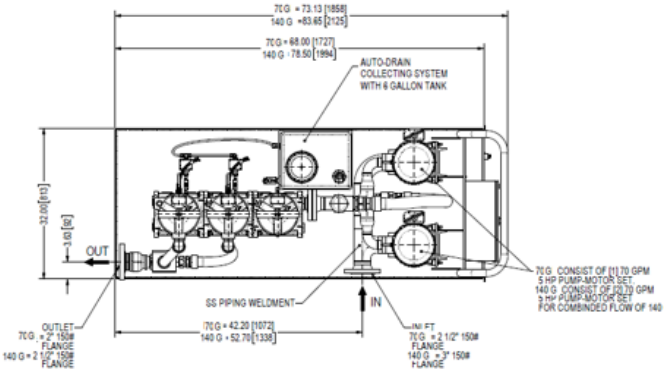
GeoDry Spare Element #7645514
GDF-70G-1M